Dimensions are approximate.

Unit: mm

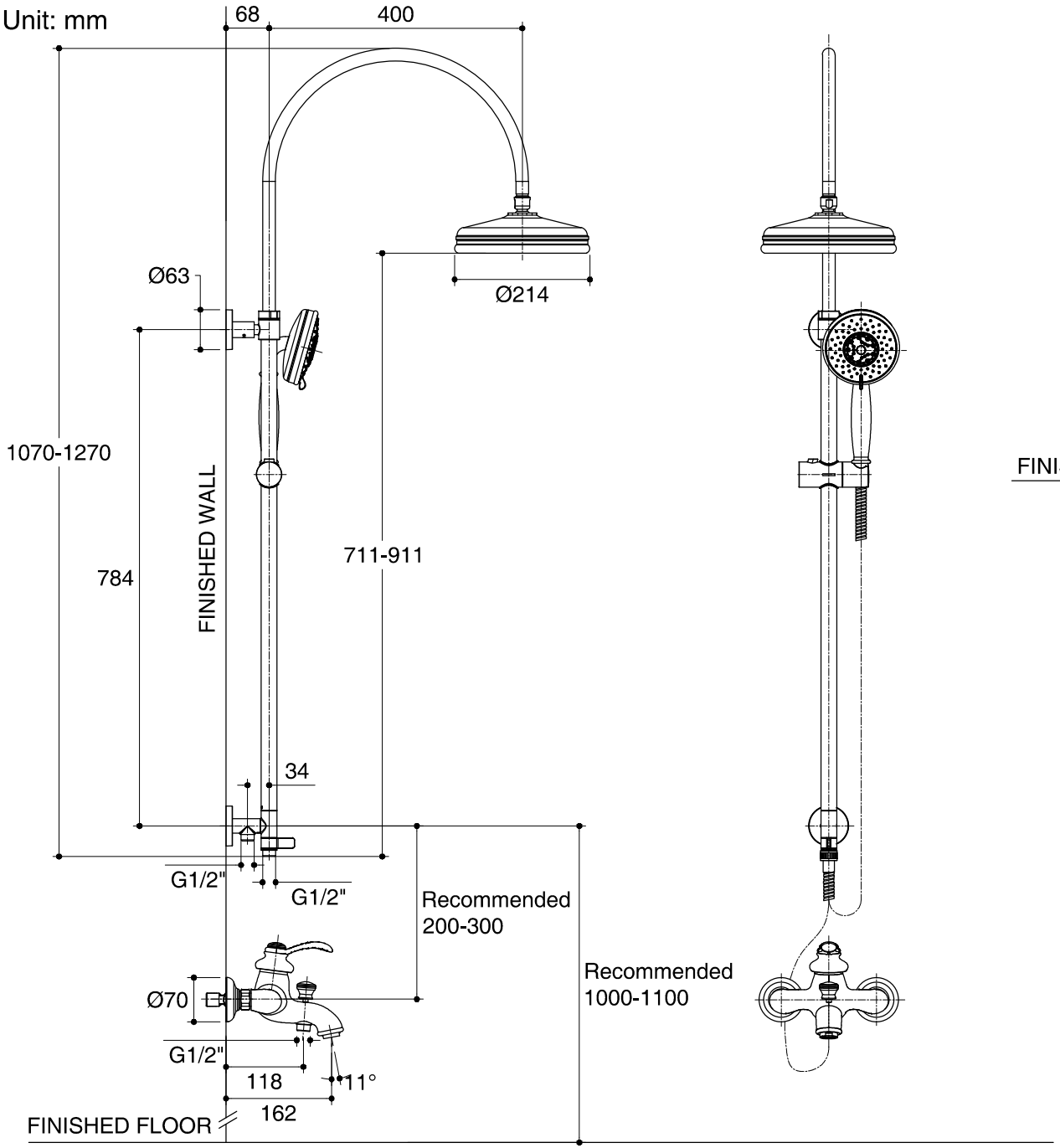

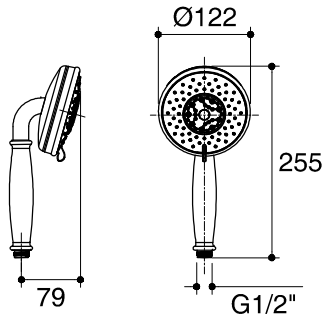

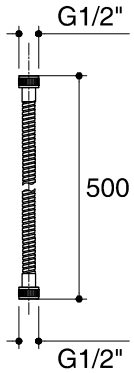

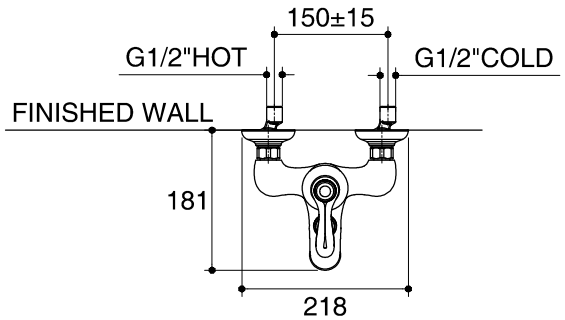

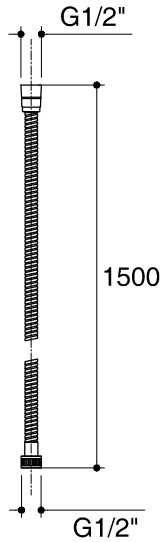

SKU	**K-98418T-D4**
Name	**FAIRFAX**
Description	**SHOWER COLUMN**

KOHLER

*The recommended dimension for installation can be adjusted according to user preferences and layout.